power

File: power.kicad_sch

STM32H7

File: STM32H7.kicad_sch

RX

File: RX.kicad_sch

TX

File: TX.kicad_sch

IF

File: IF.kicad_sch

Sheet: /
File: CW_WZW.kicad_sch

Title:

Size: A4	Date:	**Rev:**
KiCad E.D.A. 10.0.0		Id: 1/6

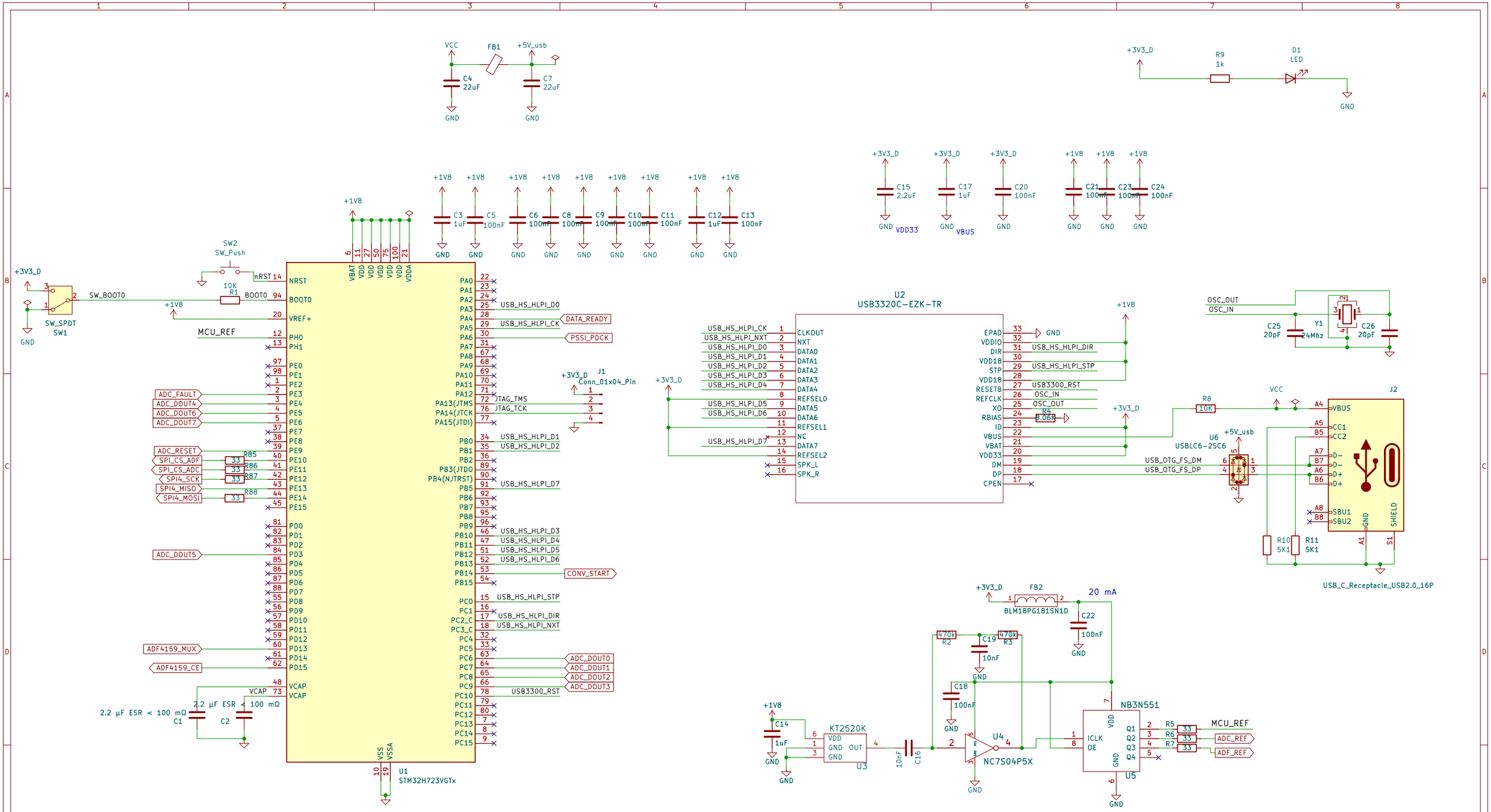

33 Ohms limits the slew rate slightly to avoid noise coupling into the sensitive ADC analog inputs.

KT2520K 48Mhz: Generates a stable frequency but in a low-voltage Clipped Sine format.
NC7S04P5X: Converts that low-voltage signal into a clean Square Wave (CMOS levels).
NB3N551: Takes the clean square wave and distributes it to multiple components with minimal timing error (low skew).

Sheet: /STM32H7/		
File: STM32H7.kicad_sch		
Title:		
Size: A3	Date:	**Rev:**
KiCad E.D.A. 10.0.0		Id: 2/6

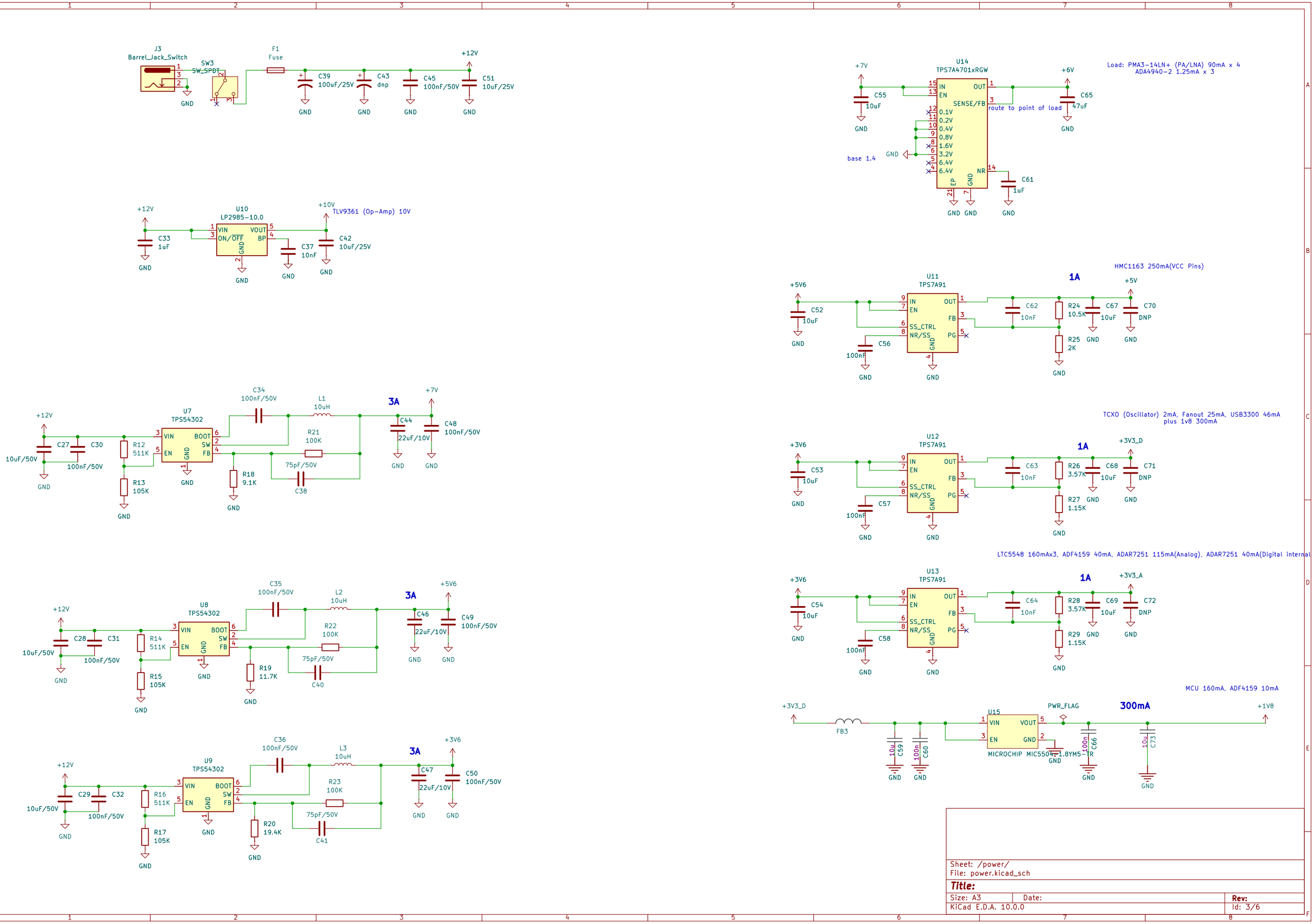
J3
Barrel_Jack_Switch
SW3
SW_SPDT
F1
Fuse
+12V
C39
100uF/25V
C43
dnp
C45
100nF/50V
C51
10uF/25V
GND
U14
TPS7A4701xRGW
+7V
+6V
C55
10uF
C65
47uF
IN
EN
OUT
SENSE/FB
route to point of load
0.1V
0.2V
0.4V
0.8V
1.6V
3.2V
6.4V
6.4V
NR
EP
base 1.4
C61
1uF
Load: PMA3-14LN+ (PA/LNA) 90mA x 4
ADA4940-2 1.25mA x 3
U10
LP2985-10.0
VIN
ON/OFF
VOUT
BP
+10V
TLV9361 (Op-Amp) 10V
C33
1uF
C37
10nF
C42
10uF/25V
U11
TPS7A91
+5V6
C52
10uF
SS_CTRL
NR/SS
FB
PG
C56
100nF
C62
10nF
R24
10.5K
R25
2K
C67
10uF
C70
DNP
+5V
1A
HMC1163 250mA(VCC Pins)
U7
TPS54302
VIN
EN
BOOT
SW
FB
C27
C30
10uF/50V
100nF/50V
R12
511K
R13
105K
C34
100nF/50V
L1
10uH
R21
100K
75pF/50V
C38
R18
9.1K
C44
22uF/10V
C48
100nF/50V
3A
U12
TPS7A91
+3V6
C53
10uF
C57
100nF
C63
10nF
R26
3.57K
R27
1.15K
C68
10uF
C71
DNP
+3V3_D
TCXO (Oscillator) 2mA, Fanout 25mA, USB3300 46mA
plus 1v8 300mA
U8
TPS54302
C28
C31
R14
511K
R15
105K
C35
100nF/50V
L2
10uH
R22
100K
R19
11.7K
C40
C46
22uF/10V
C49
100nF/50V
+5V6
U13
TPS7A91
C54
10uF
C58
100nF
C64
10nF
R28
3.57K
R29
1.15K
C69
10uF
C72
DNP
+3V3_A
LTC5548 160mAx3, ADF4159 40mA, ADAR7251 115mA(Analog), ADAR7251 40mA(Digital internal LDO)
U9
TPS54302
C29
C32
R16
511K
R17
105K
C36
100nF/50V
L3
10uH
R23
100K
R20
19.4K
C41
C47
22uF/10V
C50
100nF/50V
+3V6
FB3
C59
10u
C60
100n
U15
MICROCHIP MIC5504-1.8YM5-TR
PWR_FLAG
300mA
+1V8
C66
100n
C73
10u
MCU 160mA, ADF4159 10mA
Sheet: /power/
File: power.kicad_sch
Title:
Size: A3
Date:
Rev:
KiCad E.D.A. 10.0.0
Id: 3/6

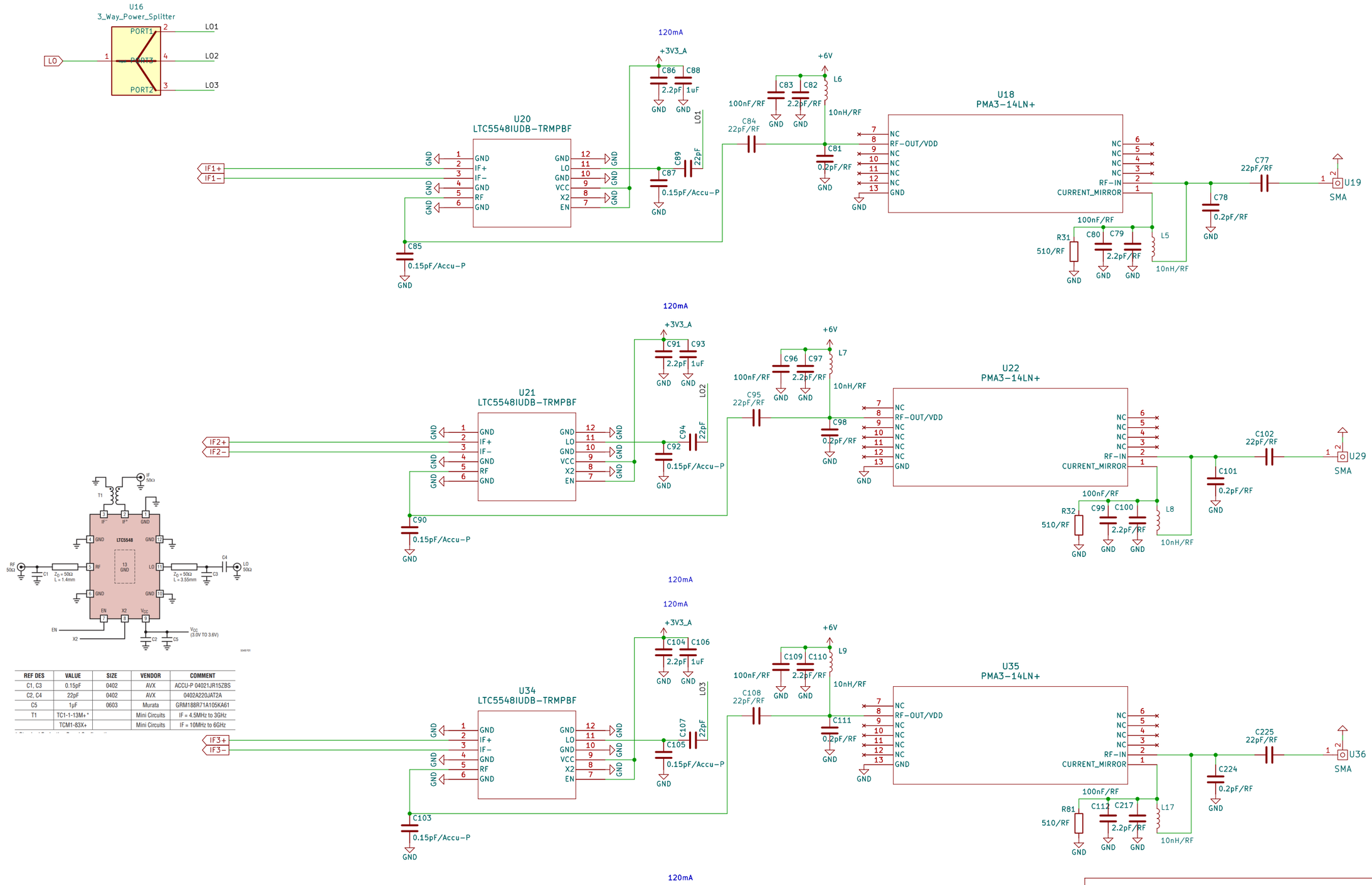

REF DES	VALUE	SIZE	VENDOR	COMMENT
C1, C3	0.15pF	0402	AVX	ACCU-P 04021JR15ZBS
C2, C4	22pF	0402	AVX	0402A220JAT2A
C5	1µF	0603	Murata	GRM188R71A105KA61
T1	TC1-1-13M+*		Mini Circuits	IF = 4.5MHz to 3GHz
	TCM1-83X+		Mini Circuits	IF = 10MHz to 6GHz

Sheet: /RX/
File: RX.kicad_sch

Title:

Size: A3	Date:	Rev:
KiCad E.D.A. 10.0.0		Id: 4/6

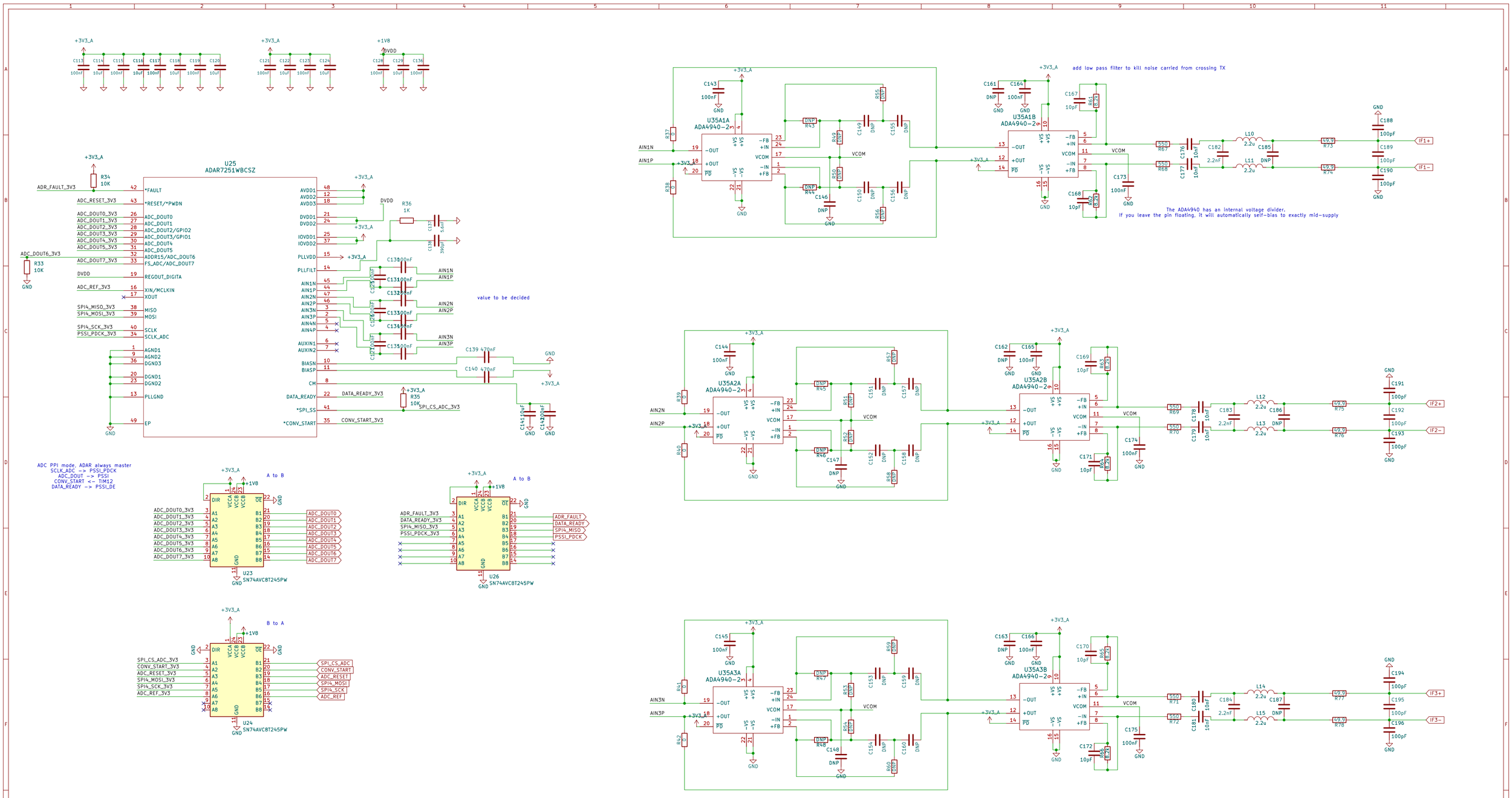

Sheet: /IF/
File: IF.kicad_sch

Title:

Size: A2	Date:	Rev:
KiCad E.D.A. 10.0.0		Id: 5/6

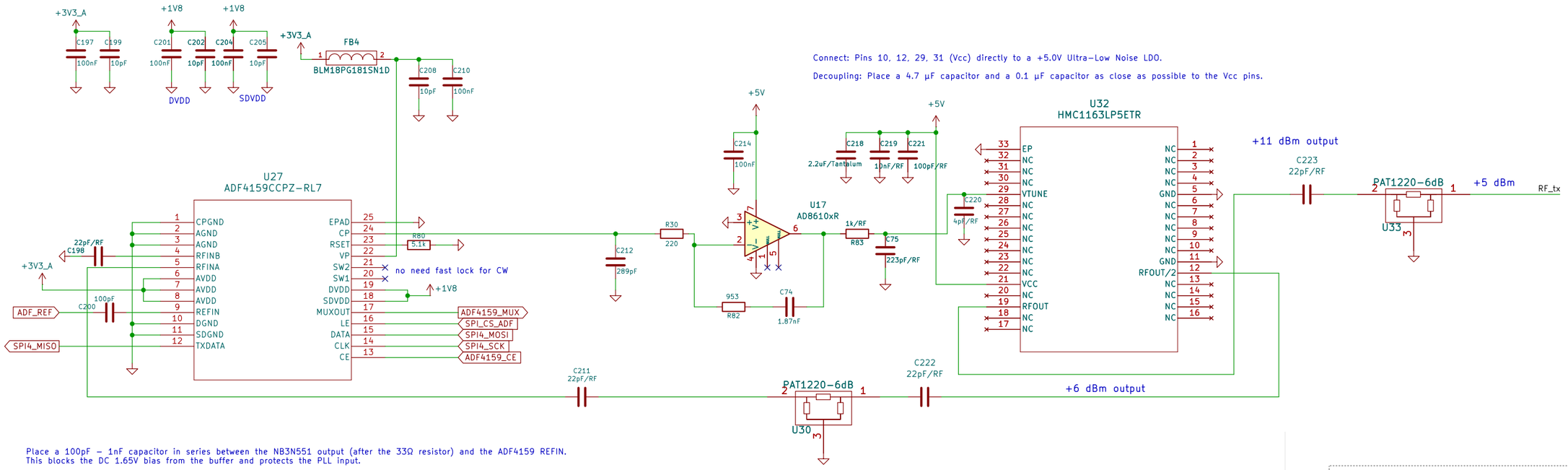

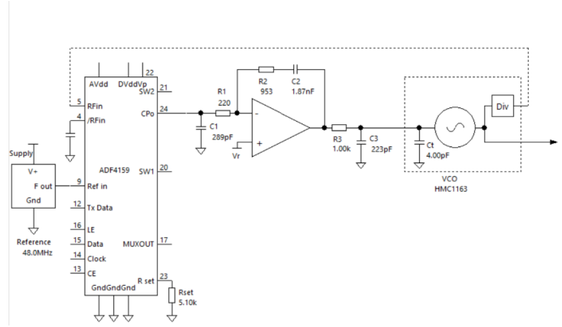

CHARACTERIZATION TEST AND APPLICATION CIRCUIT

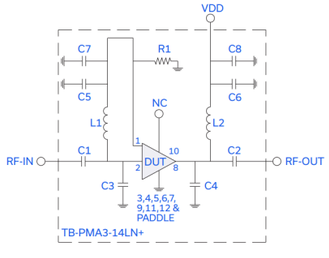

Fig 1. Application and Characterization Circuit
Note: This block diagram is used for characterization.
(DUT is soldered on Mini- Circuits Characterization test board TB-PMA3-14LN+)
Gain, Return loss, Output power at 1dB compression (P1dB), output IP3 (OIP3) and noise figure measured using Agilent's N5242A PNA-X microwave network analyzer.

Conditions:
1. VDD=6V
2. Gain and Return loss: Pin= -25dBm
3. Output IP3 (OIP3): Two tones, spaced 1 MHz apart, -5 dBm/tone at output.

Component	Size	Value	Part Number	Manufacturer
C1 & C2	0402	0.01uF	GRM155R71H103KA88D	Murata
C3	0402	0.2pF	GJM1555C1HR20WB01D	Murata
C4	0402	0.1pF	GJM1555C1HR10WB01D	Murata
C5 & C6	0402	100pF	GRM1555C1H101JA01D	Murata
C7 & C8	0402	0.1uF	GRM155R71H104KE14J	Murata
L1 & L2	0402	900nH	0402DF-901XJRU	Coilcraft
R1	0402	510Ω	RK73H1ETTP5100F	KOA

The Rule: The larger the physical package, the higher the inductance.
0603 or 0805 Package: At 10 GHz, the internal inductance of an 0603 capacitor is so high that it stops acting like a capacitor and starts acting like an Inductor. Instead of passing the signal, it blocks it (high impedance).
0402 Package: This is physically small enough that the parasitic inductance is negligible. It remains "capacitive" up to very high frequencies.
Bonus Reason: PCB Trace Matching
A 50Ω transmission line on a standard PCB is usually about 0.5mm wide.
A 0402 component is 0.5mm wide.
It fits perfectly on the line. If you used an 0805 (1.2mm wide), it would hang off the sides of the track, creating a "capacitive lump" that reflects your radar signal back to the source.
2. The Value: Why 10 pF to 100 pF? (The Goldilocks Zone)
At 10 GHz, a 0.1 pF capacitor has a resistance of 159Ω.
Ideally, 1 µF has 0Ω resistance.
Reality: A 1 µF capacitor requires many internal layers of metal. This creates huge inductance.
Self-Resonant Frequency (SRF): A 1 µF capacitor likely hits its "limit" at 20 MHz. At 10 GHz, it is effectively an open circuit or a giant inductor. It will block your signal completely.

Typically, a high-quality (C0G/NP0) 10 pF capacitor has an SRF above 10 GHz, meaning it behaves correctly.
Value: 10 pF is the safest bet for 10 GHz. (100 pF is okay, but 10 pF is often better for resonance).
Size: 0402 (Metric 1005).
Dielectric: C0G or NP0. (Do NOT use X7R or X5R. They are lossy and unstable at RF).
Tolerance: ±0.1pF or ±5%.

Placement:
Place the capacitor closer to the PMA3-14LN+ input than the HMC1163 output if you have to choose, but generally, anywhere on the 50Ω line is fine.

Sheet: /TX/
File: TX.kicad_sch

Title:

Size: A3	Date:	Rev:
KiCad E.D.A. 10.0.0		Id: 6/6